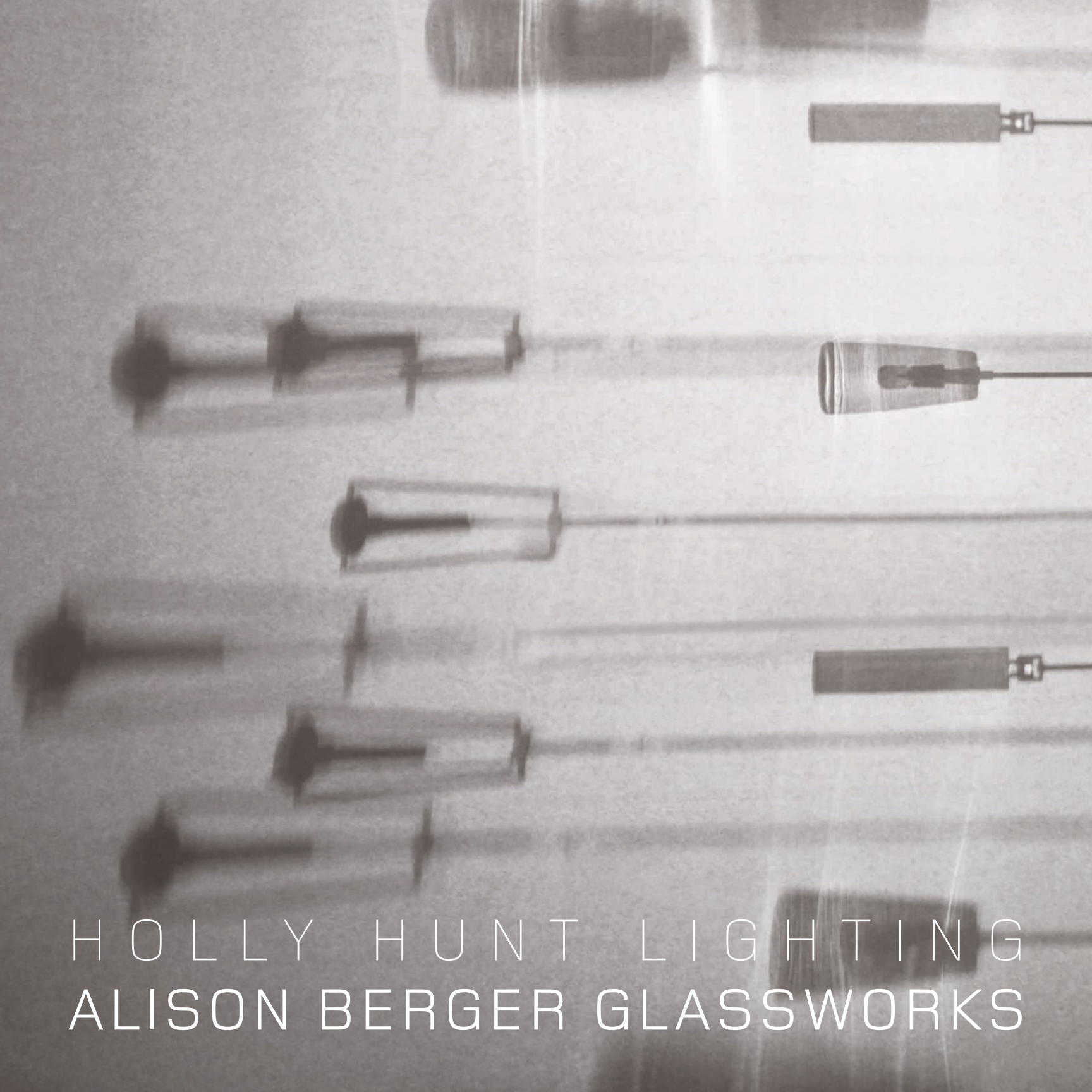

HOLLY HUNT LIGHTING
ALISON BERGER GLASSWORKS

GLASS CAPTURES THE PROCESS OF REMEMBERING AND AS LIGHT FADES, FORGETTING

Light is the medium, glass is the material and memory, elusive as it is, is my theme. The work is based on the visual vocabulary that societies create to manifest their beliefs, desires and rituals. Victorian fly traps, fireflies, apothecary jars and devices of measure are examples of the objects that have inspired this work. I am drawn to these pieces because they are simultaneously enigmatic and revealing in what they say about the cultures that invented and utilized them. Rendered in glass, altered in scale and stripped of decoration, their essence is exposed. These pieces represent a reinterpretation that makes them feel contemporary and old world. Like memory itself, these glass objects, sculptures and furnishings transcend time and place.

Alison Berger

MOON PENDANT

BOW PENDANT

BOW CHANDELIER

AMPHORA PENDANT

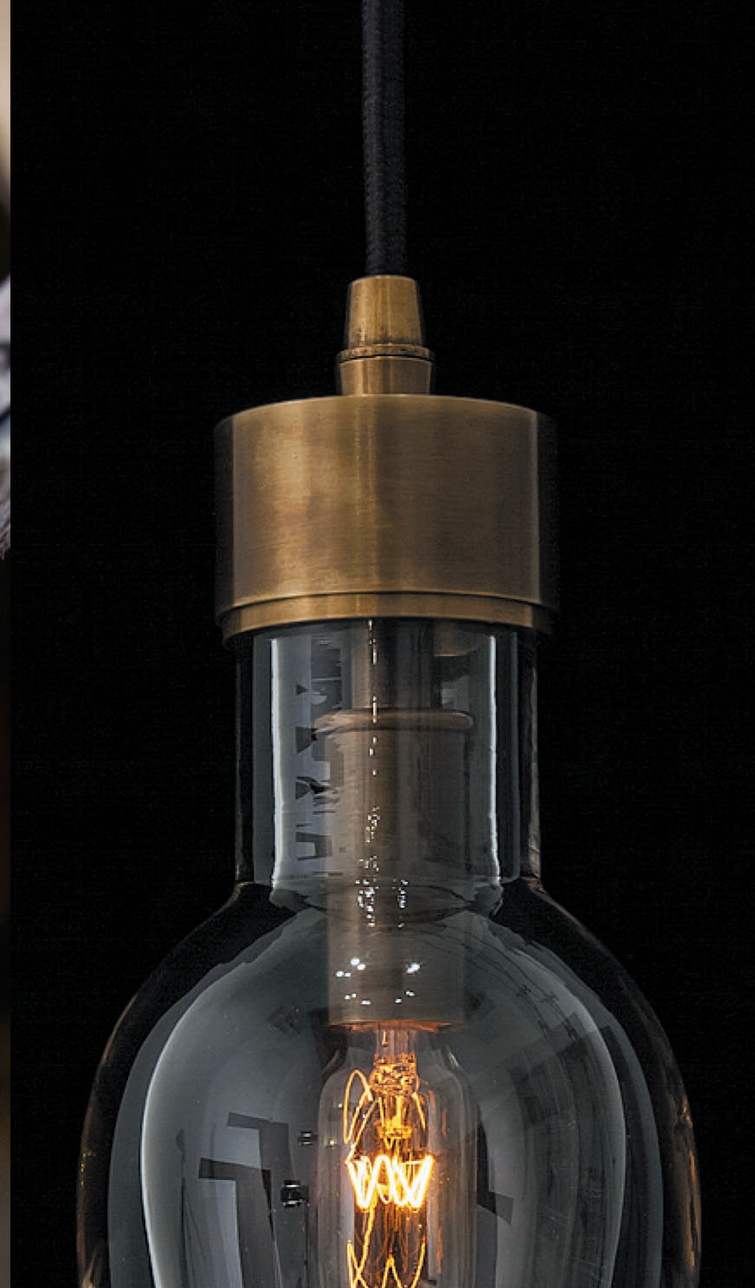

TROUGH PENDANT

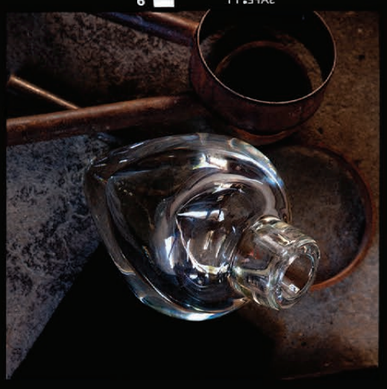
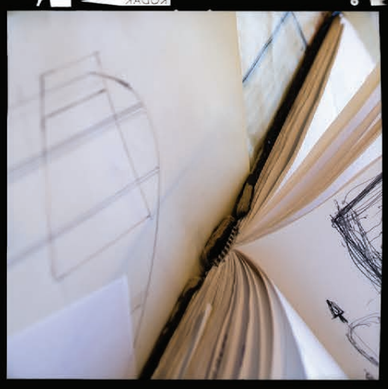

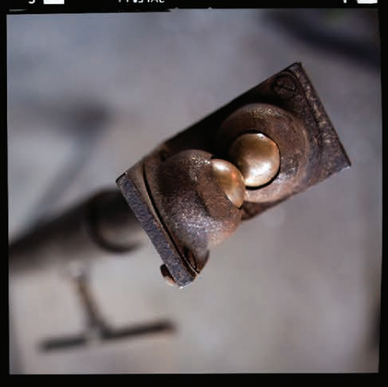

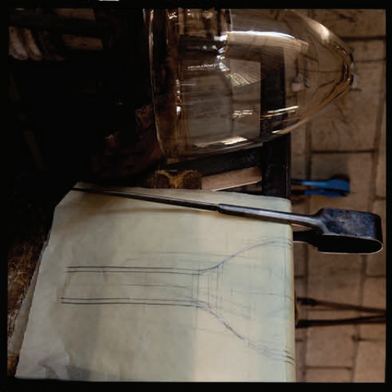

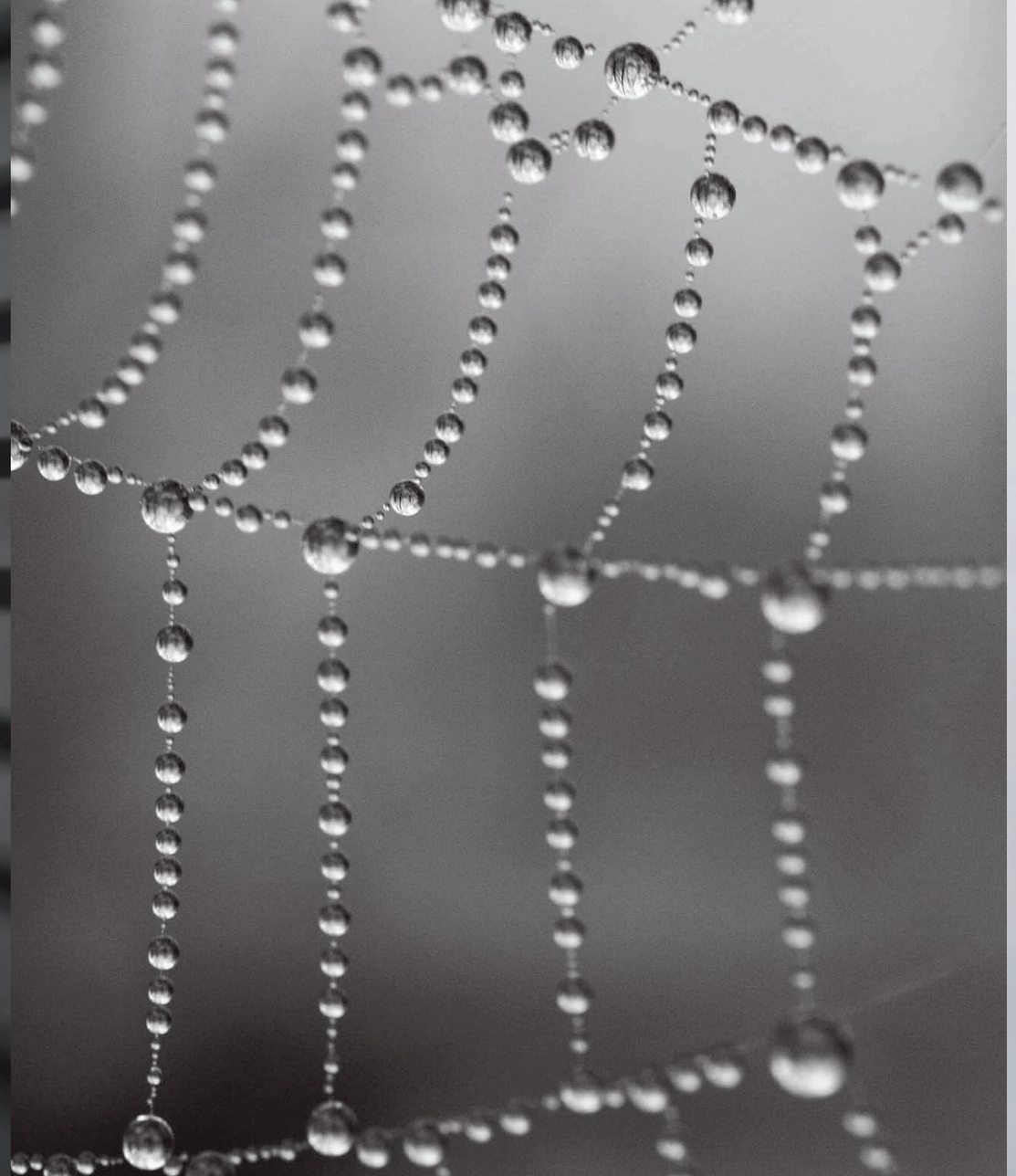

CAGE PENDANT

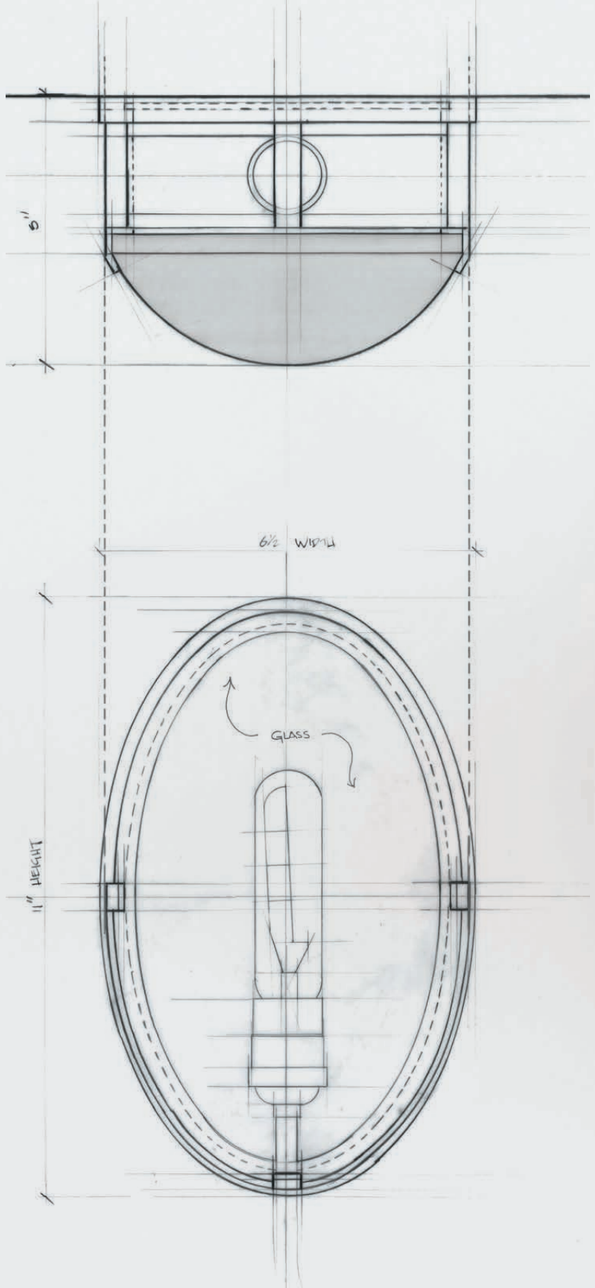
6"
6½ WIDTH
GLASS
11" HEIGHT

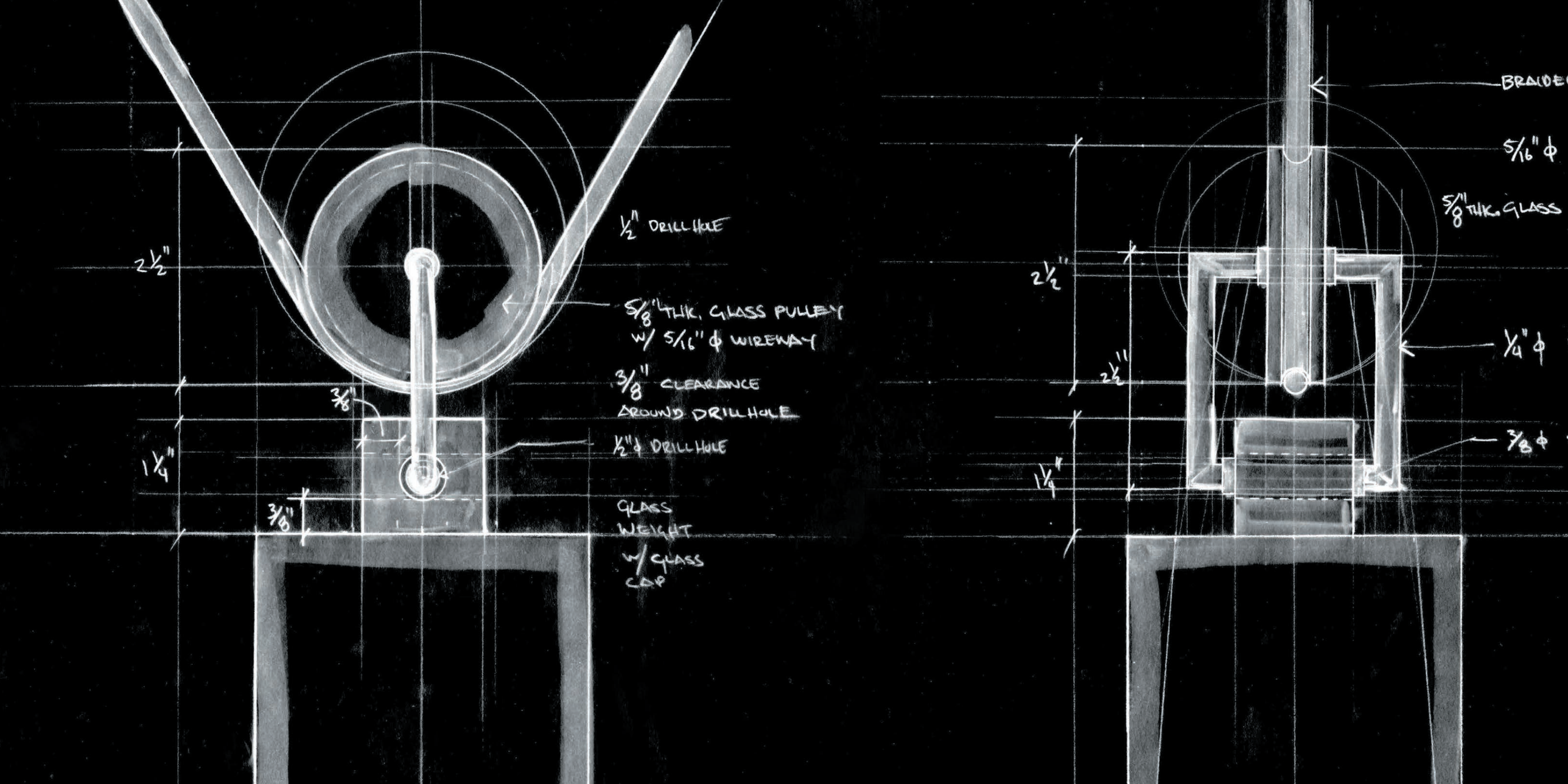
1/2" DRILL HOLE
2 1/2"
5/8" THK. GLASS PULLEY
W/ 5/16" ϕ WIREWAY
3/8" CLEARANCE
AROUND DRILL HOLE
3/8"
1/2" ϕ DRILL HOLE
1 1/4"
3/8"
GLASS
WEIGHT
W/ GLASS
CAP
BRAIDED
5/16" ϕ
5/8" THK. GLASS
2 1/2"
1/4" ϕ
2 1/2"
3/8 ϕ
1 1/4"

PULLEY PENDANT

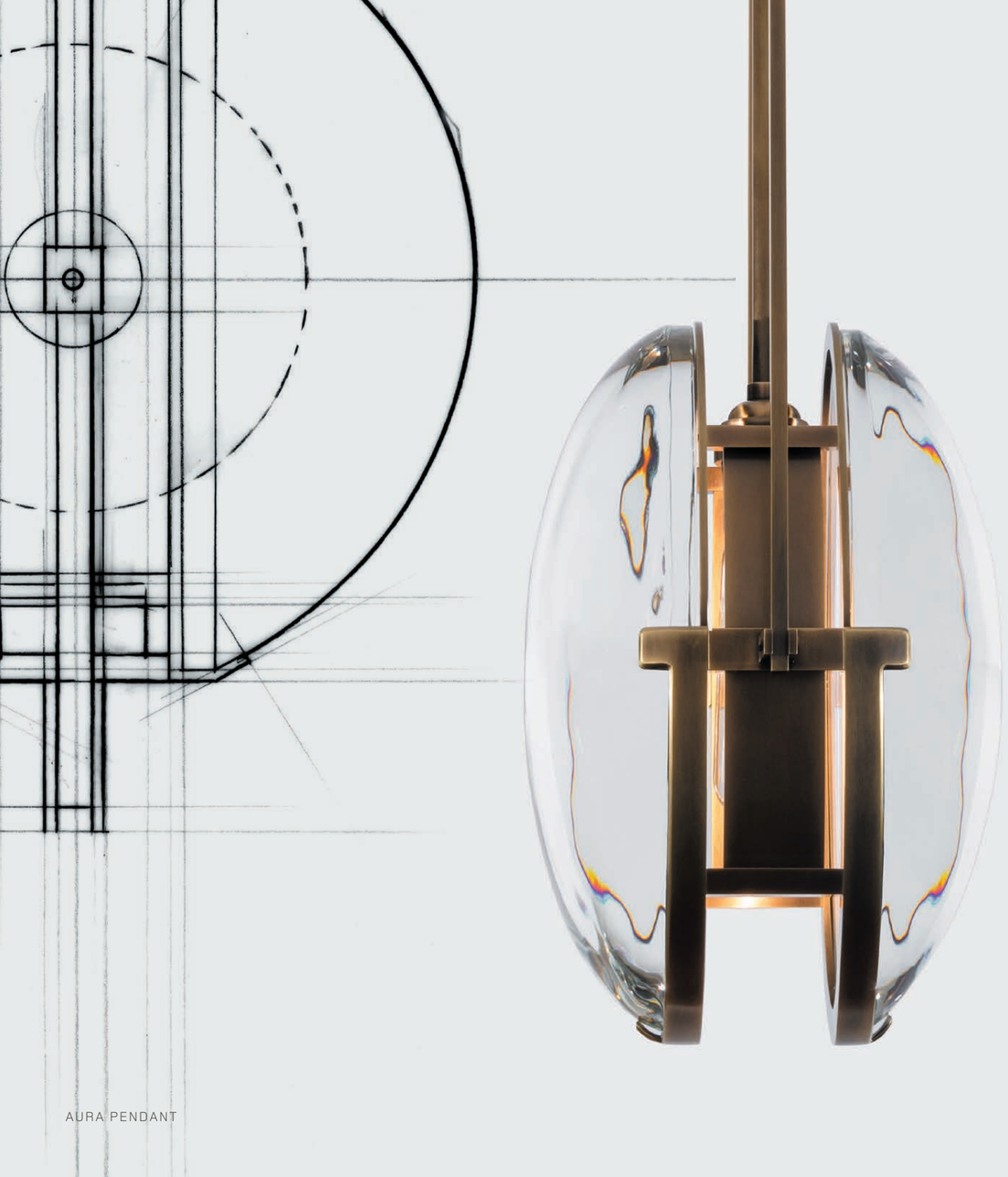

AURA PENDANT

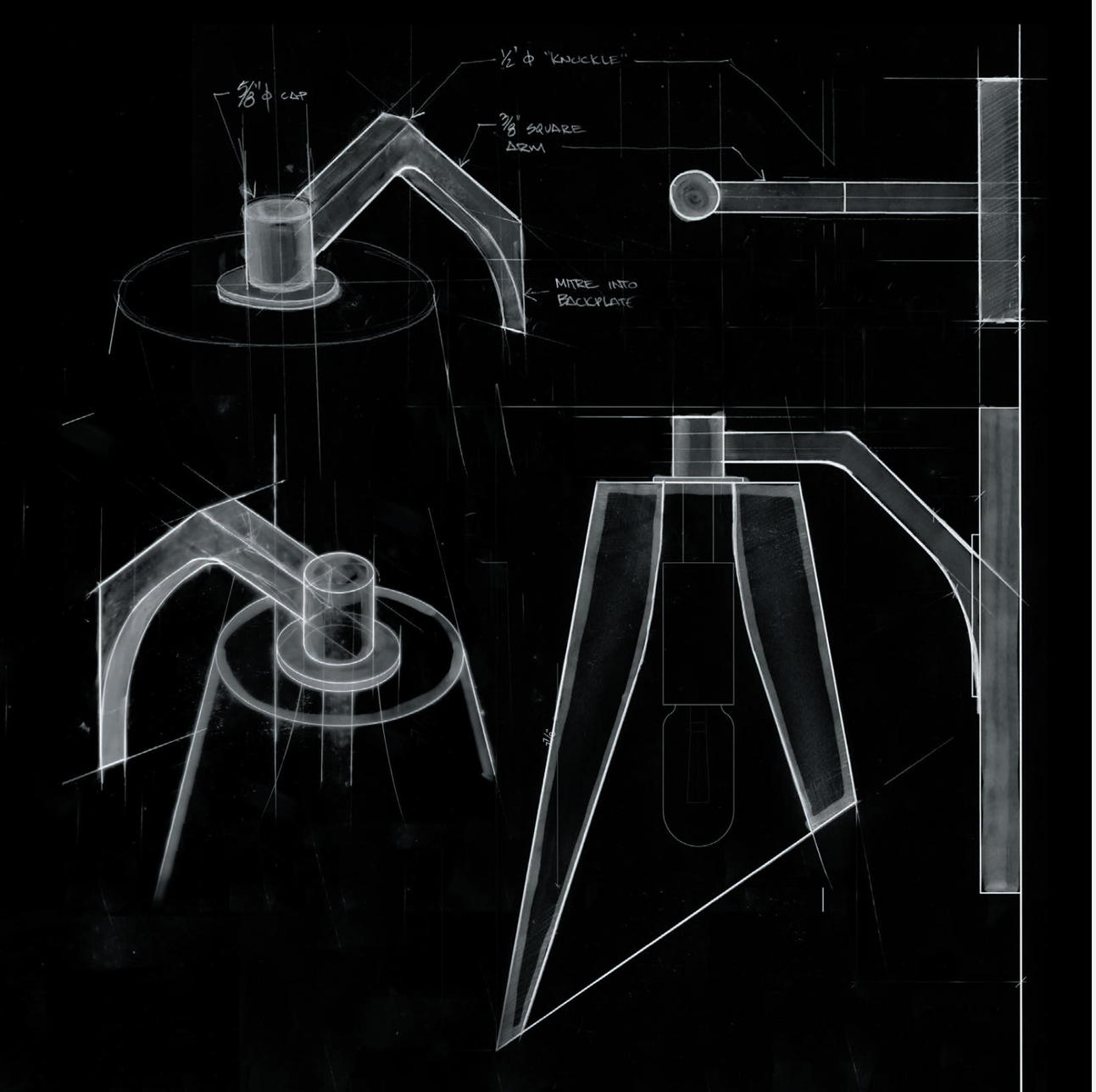

BEVEL SCONCE

COUNTERWEIGHT CHANDELIER

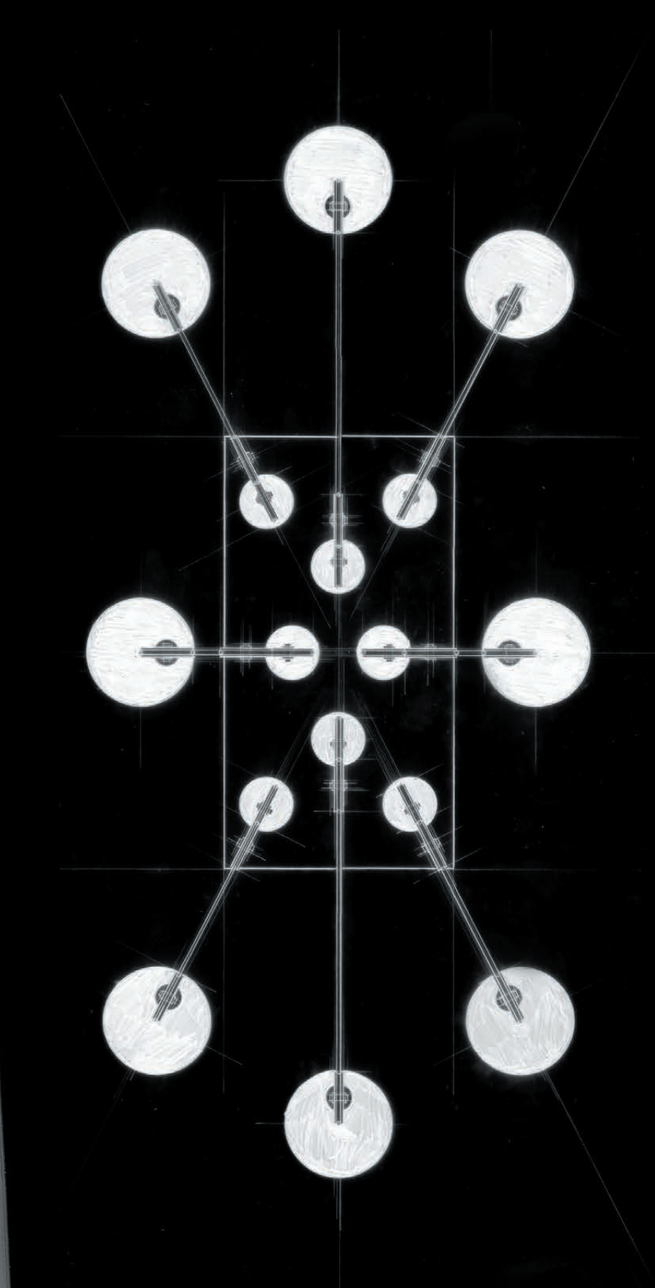

CLOCK CHANDELIER

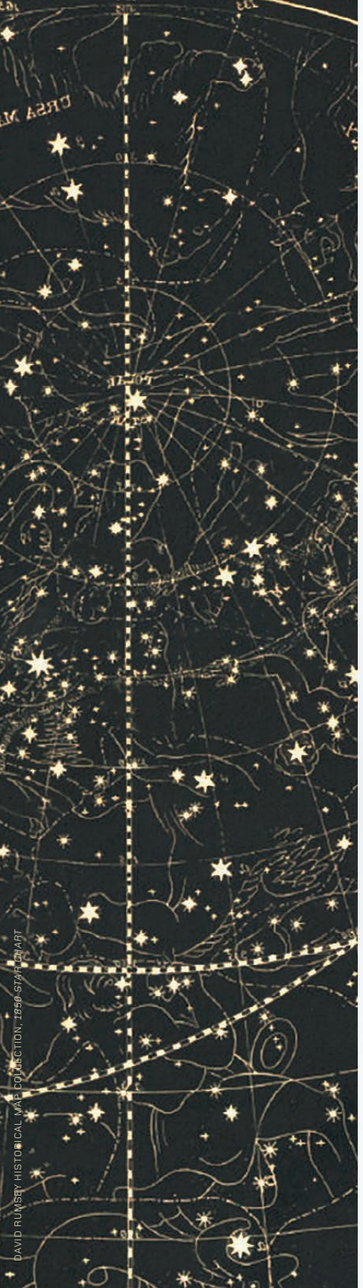

DAVID RUMSEY HISTORICAL MAP COLLECTION, 1856 GYPSY CHART

ASTRONOMER'S TABLE

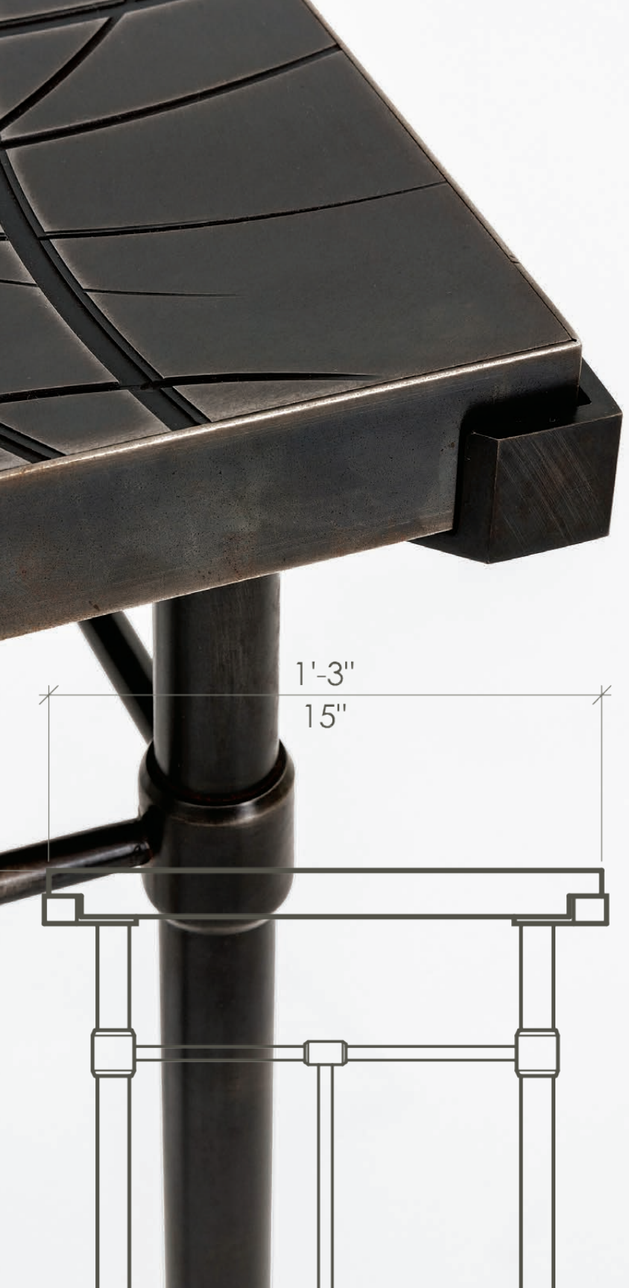

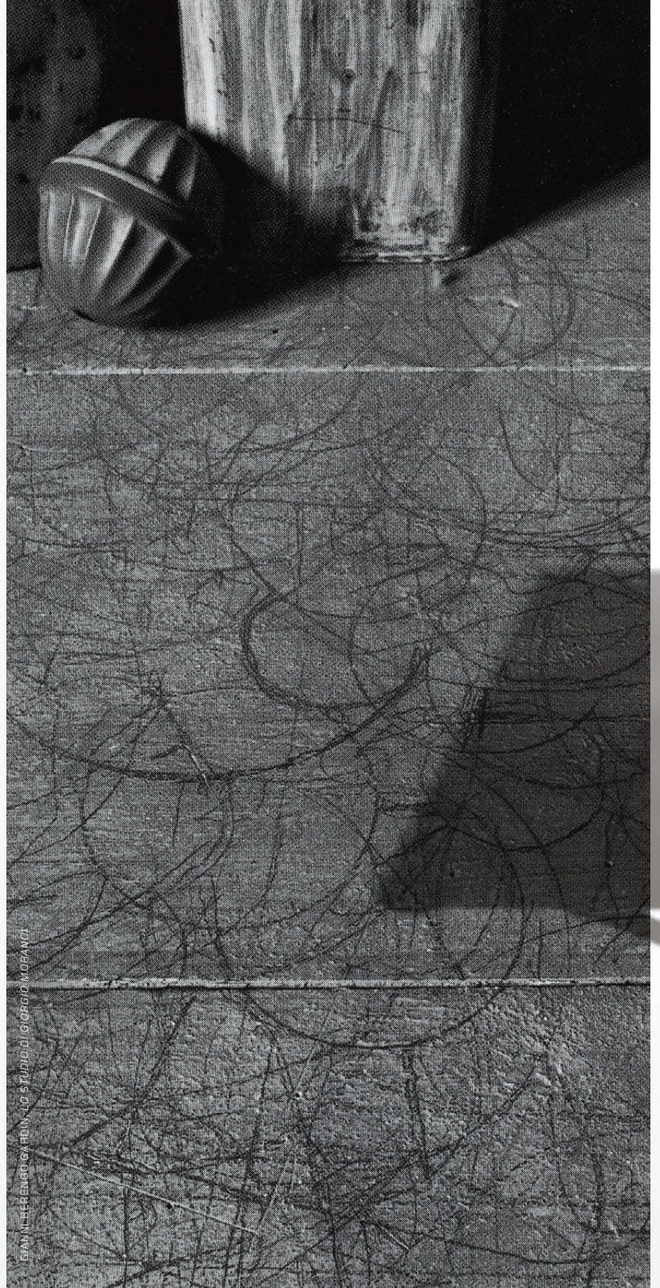

GIANNI HERENDOGA FRANCO STUDIO DI GIOVANNI

PAINTER'S TABLE

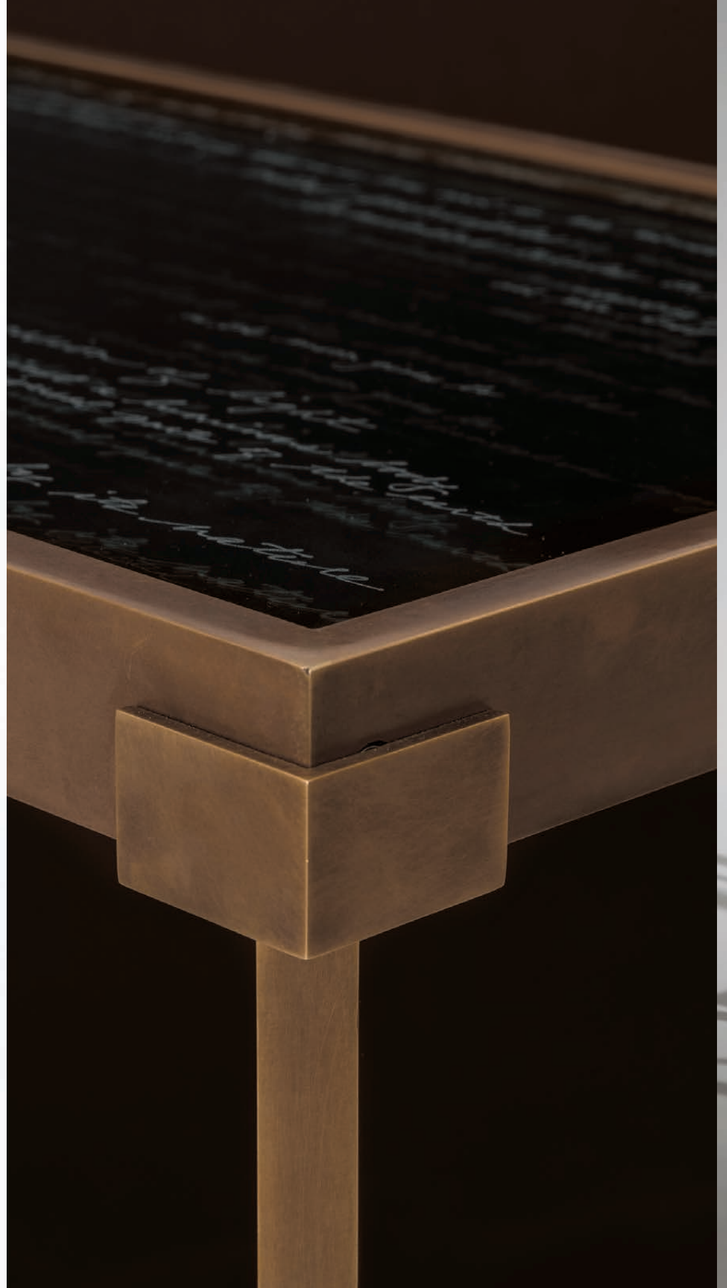

WRITER'S CONSOLE AND TABLE

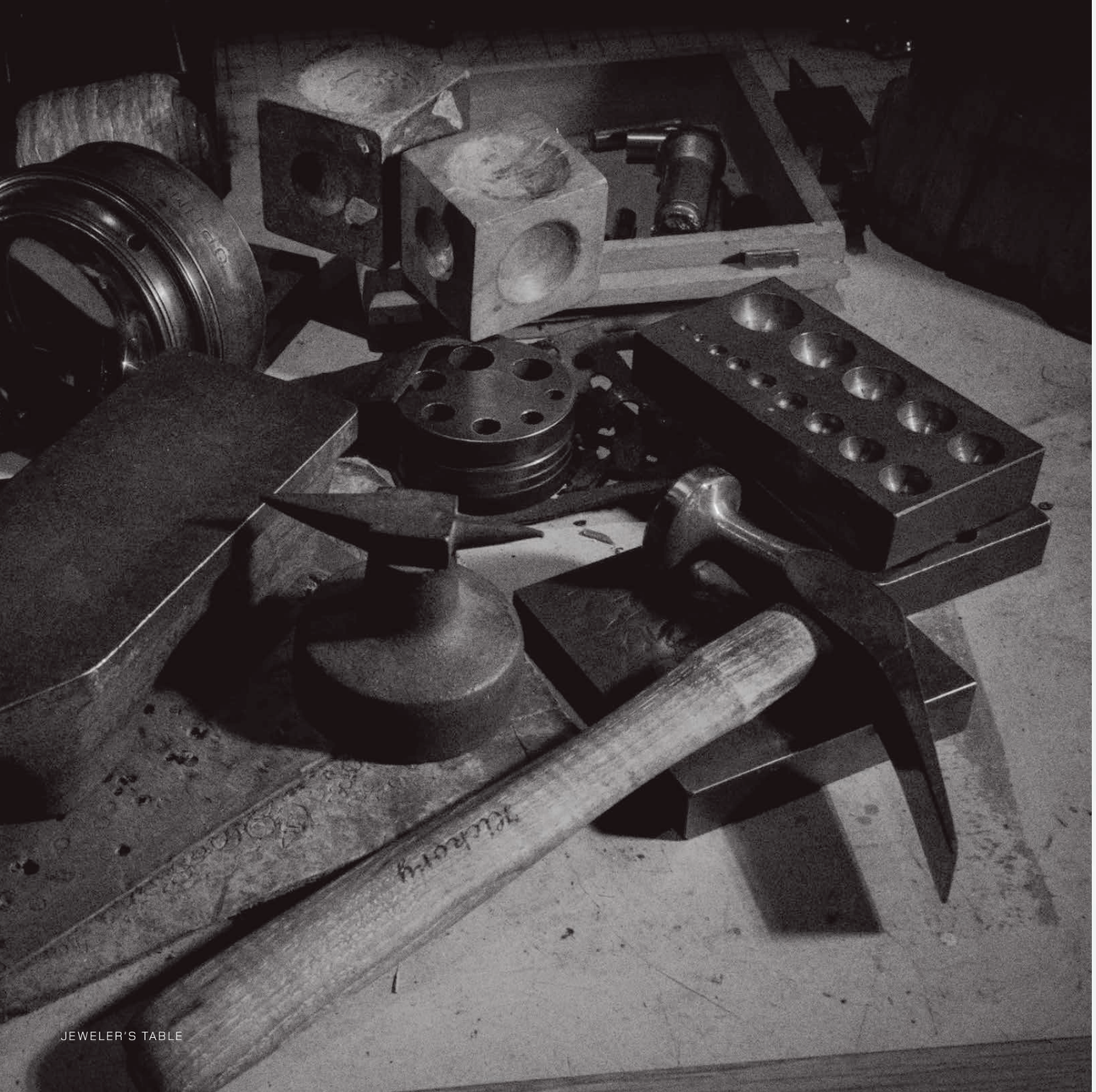

JEWELER'S TABLE

CARPENTER'S BENCH

BEACON PENDANT

CHAMBER CHANDELIER

CYLINDER SCONCE

BELL JAR PENDANT

CRYSTAL SPHERE PENDANT

KEEPER'S LIGHT TABLE LAMP

BEVEL SCONCE

CRYSTAL SPHERE SCONCE

LANTERN PENDANT

LENS CHANDELIER

PISTIL PENDANT

SURVEYOR'S FLOOR LAMP

LENS SCONCE

ROMAN RING FLOOR LAMP

THREAD BY THREAD PENDANT

LURE SCONCE

ROMAN RING PENDANT

WORD PENDANT

CRYSTAL SPHERE CHANDELIER

SCRIPTED CHANDELIER

SILVER LINE CHANDELIER

THREAD BY THREAD CHANDELIER

HOLLY HUNT	CHICAGO DALLAS HOUSTON LONDON LOS ANGELES MIAMI MINNEAPOLIS NEW YORK WASHINGTON DC
KNEEDLER–FAUCHERE	DENVER SAN FRANCISCO
JIM THOMPSON	ATLANTA
JENNIFER WEST	SEATTLE
JOHN BROOKS	SCOTTSDALE
PRIMAVERA	TORONTO
STUDIO B HOME	TORONTO
WEBSTER & COMPANY	BOSTON